6 Ton Hydraulic Pickup crane with truck supplier in china

XCMG
SQ5S

XCMG

Advantage of Our Crane Mounted Truck

1.We have adopted the advanced technology of numerical-controlled plasma incision and conduct sophisticated processing of the truck parts.

2.The boring-milling process enables a higher concentricity of the parts and extends its life spans.

3.The invisible H-shaped outriggers,the double horizontal outriggers and the vertical outriggers at the back integrately enable a wider expansion and more safety.

4.The material of our splices comes from the USA with a oil tube which have better leakproofness, oxidation resistance and incorruptiblenesses.

5. We independently developed the motor hydraulic station of truck'a cranes which strengthens the driving force, enables stable operation and energy conservation.

Main Specification

【Main specifications】			
Product model and name	EQ5160GKJ1 Truck With Crane		
Gross vehicle weight(kg)	15800	Drive type	4 x 2
Payload(kg)	7500	cab seats (man)	3
Curb weight(Kg)	8105	Overall dimension (mm)	9000×2490×3600
Approach/departure angle (°)	32/15	Box internal dimension(mm)	6140×2294×550
Number of axles	2	Front/rear hang(mm)	1250/2650
Axle load(Kg)	5900/9900	Wheelbase(mm)	5100
Max speed(Km/h)	80		
【Chassis specifications】			
Chassis model	EQ5160GKJ1	Brand name	Dongfeng
Manufacturer	Dongfeng Motor Corporation	Tires No.	6
Approach/departure angle (°)	32/22	Tire specification	10.00R20
Steel spring number	9/10+8	Front track(mm)	1940
Fuel type	Diesel	Rear track(mm)	1860
Emission standard	Euro III	Transmission	6 gears
Cabin	Blue【other colors are available】, Flat, luxurious interior trim and seat, with air conditioning.		
Engine Information	Engine model	B190 33	
	Engine manufacturer	Dongfeng Cummins Engine Co., Ltd	
	Displacement(ml)	5900	
	Power(Kw)	140(190HP)	
	Max Torque	640 N.m	
	Speed at Max Torque	1500 rpm	
【Crane specification】			
Crane model	SQ6.3SA2	Type of Crane	Telescopic boom Crane
Max lifting weight【kg】	6300	Max lift height【m】	12.8
Working radius(m)	11	Operation method	High seat control / Side control
Number of arms	4	Outrigger (pcs)	2 / 4
【Functions】			
The truck consists of chassis, box, power take-off and crane, achieving cargo lifting and moving through hydraulic lifting and telescopic system. In general, H-type outrigger is equipped to realize its stability. To be further strengthened stability of the truck, rear outrigger also can be equipped if the customer require. The truck can 360 ° continuously rotate.			

Brief Introduction

吊臂界面采用加强钢板，且8吨以上吊机采用U型臂，可以提高截面抗弯能力！

THE BOOM INTERFACE WITH REINFORCED STEEL PLATE, AND ABOVE 8 TONS CRANE USE U-TYPE BOOM WITH POWERFUL BENDING RESISTANCE.

液压绞车依靠碟簧和摩擦片制动，效率高且噪音低，发热量小，耐用！！

HYDRAULIC WINCH RELIES ON DISC SPRING AND FRICTION PLATE TO BRAKE,HIGH EFFICIENCY, LOW NOISE AND LOW HEAT GRNERATION;

下降过程中依靠液压平衡阀平衡重物，产品的可靠性极高！

RELYING ON HYDRAULIC BALANCE VALVE TO BALANCE HEAVY OBJECTS DURING THE DESCENDING PROCESS GREATLY IMPROVING PRODUCT RELIABILITY.

6.3 吨 以上吊机均采用方厢支腿，能更有效的保护油缸。

ABOUT 6.3T CRANE USE SQUARE LEGS CAN PROTECT THE CYLINDER MORE EFFECTIVELY.

水性油漆，更加环保。

WATER-BASED PAINT,MORE ENVIRONMENTALLY FRIENDLY.

Crane Specification

Crane model	Max Lifting quality	Max Lifting Moment	Recommended Power	H-System Max Flow Rate	H-System Rated Pressure	Oil Tank Volume	Rotation Angle	Crane Dead Weight	Install Space
SQ6.3SK2Q	6300KG	15.7 T.M	20 KW	40 L/MIN	20MPA	90 L	Full Gyration	2117 KG	900 MM

SQ6.3SK2Q

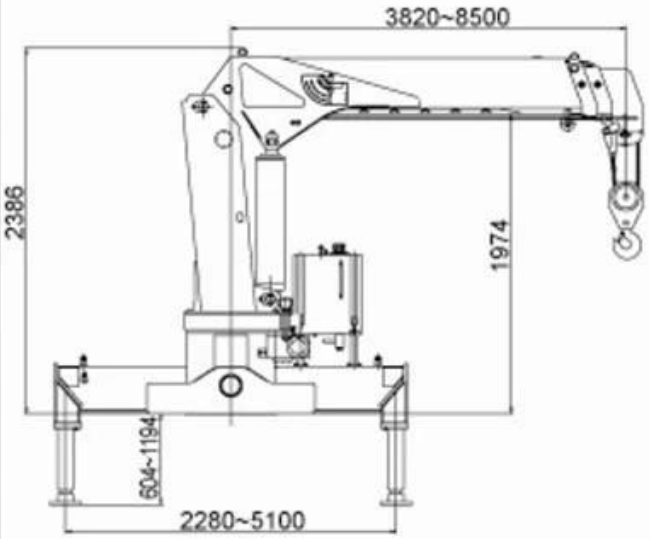

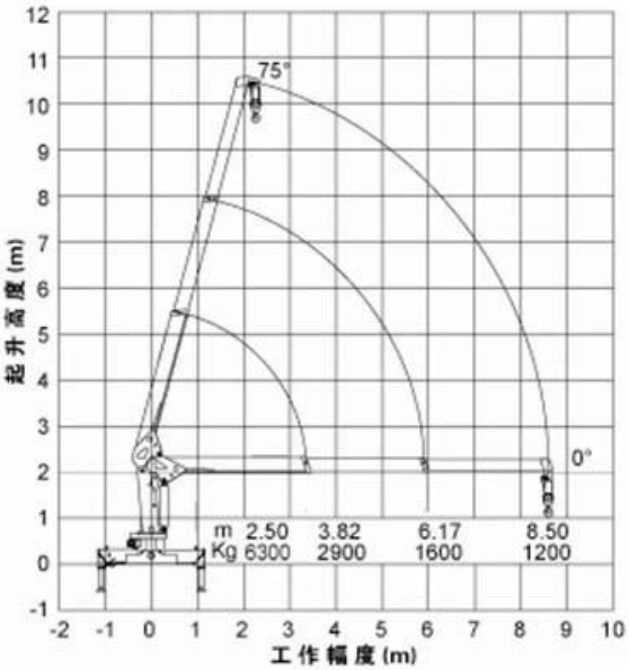

SQ5SK2Q

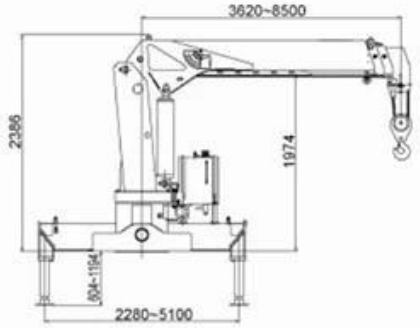

STRAIGHT ARM WITH CRANE SAMPLE

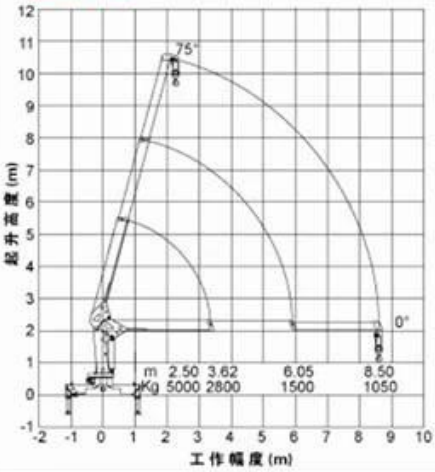

SQ8SK3Q

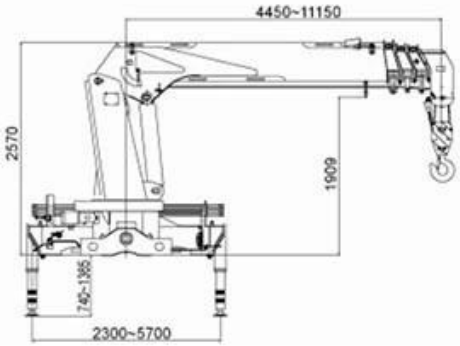

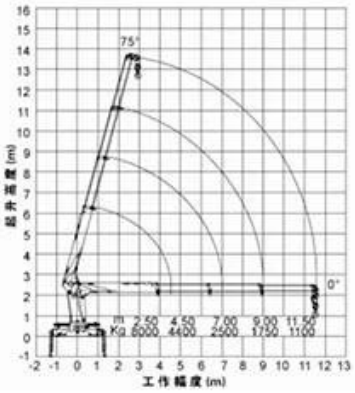

SQ16SK4Q

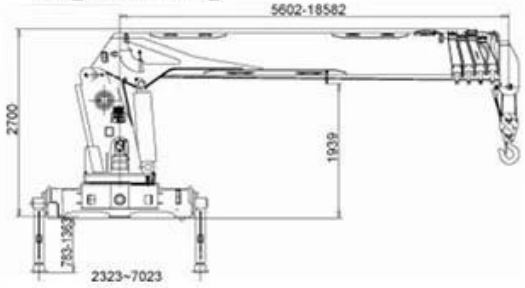

As per a defferent requires from our customers, we will recommend a suitable type as refering in the selected truck, about the crane weight, we have many chooses, such as Straight arm: **SQ2SK1Q/ SQ2SK2Q/SQ3.2SK1Q/SQ3.2SK2Q/SQ4SK3Q/SQ5SK2Q/SQ5SK3Q/SQ6.3SK3Q /SQ8SK3Q/SQ10SK3Q/SQ12SK3Q/SQ14SK4Q/SQ16SK5Q/SQ25SK2Q** and so on.

SQ5ZK2Q

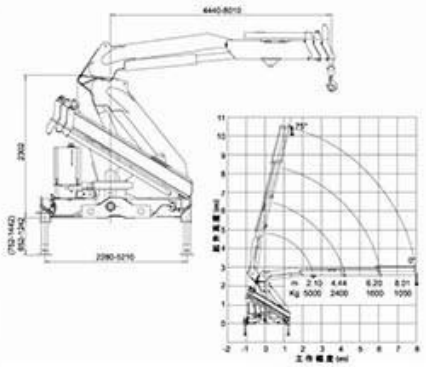

SQ8ZK3Q

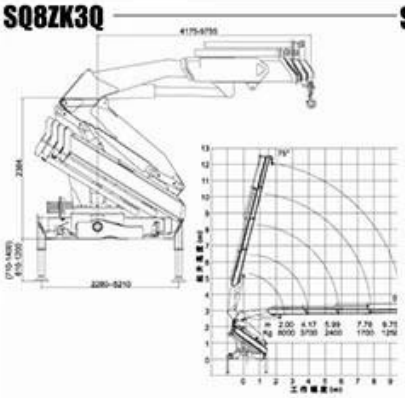

SQ6.3ZK2Q

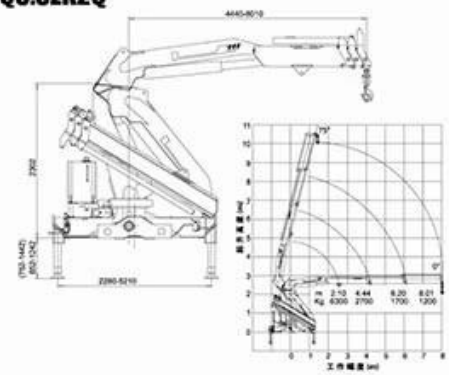

FOLDING ARM WITH CRANE SAMPLE

SQ10ZK3Q

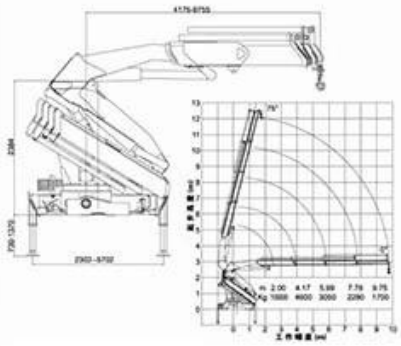

SQ12ZK3Q

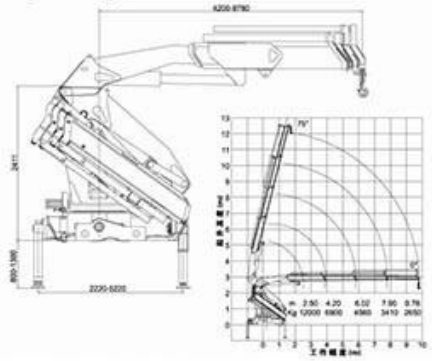

SQ25ZK6Q

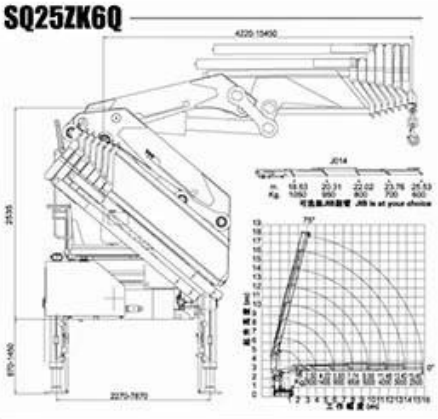

As per a defferent requires from our customers, we will recommend a suitable type as refering in the selected truck, about the crane weight, we have many chooses, such as Folding arm: **SQ5ZK2Q/ SQ5ZK3Q/ SQ6.3ZK2Q/ SQ6.3ZK3Q/ SQ8ZK3Q/ SQ10ZK3Q/ SQ12ZK3Q/ SQ14ZK3Q/ SQ16ZK4Q/ SQ25ZK6Q and so on.**

OPTIONAL ACCESSORIES

REMOTE CONTROL

BASKET

TOP SEAT

AUGER DRILL

REAR OUTRIGGER

MOMENT LIMITED VALVE

GRAPPLE

GRAPPLE

GRAPPLE

FACTORY OVERVIEW

WORKSHOP DISPLAY

OUR CERTIFICATION

Why Choose Us?

1. **Q: How long is the warranty period?**
   A: All of our trucks have one year warranty or 25000KM since you get the truck.
2. **Q: What’s the main market of yourcompany?**
   A: We have customers all over the worldand our main market it Afrian, all the individuals and units are my partnerswho have a demand of china’s high quality automobile industry product.
3. **Q: How much the production capacity and supply capacity of your factory for one year?**
   . A: This depends on your needs. 10 years of spare parts sales experience makes us have a smooth supply channels.
4. **Q: Where is your factory located?**
   A:Our company is located in Suizhou City,Hubei Province,the Capital of Special Purpose Vehicle in China.Warmly welcome to our factory.
5. **Q: The reason why you chose our company?**
   A: We have the abundant resources supply, professional quality inspection engineers,excellent service team, we will integrate all resources for your needs, let you experience the more cost-effective and more convenient "one-stop" procurement services, effectively reduce the purchasing cost.

PACKAGING & SHIPPING

NYK LINE

OUR MARKET

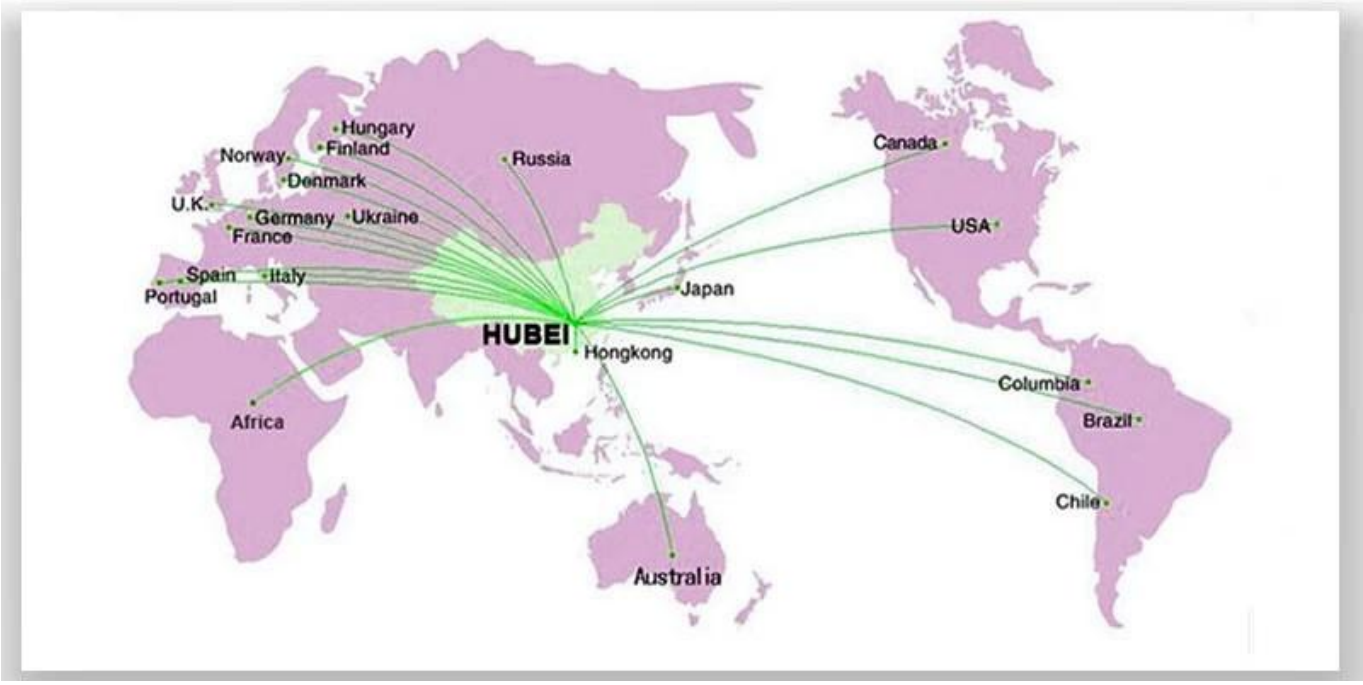
Hungary
Finland
Norway
Denmark
U.K.
Germany
Ukraine
France
Spain
Italy
Portugal
Russia
Canada
USA
Japan
HUBEI
Hongkong
Africa
Columbia
Brazil
Chile
Australia

CLIENTS INVISTING

CONTACT US

Steven.wang

Tel:+86 722 3229822

Mobile:++86 18808666258

Email: steven@chinacyalestruck.com

Skype:Truck_chengli

Whatsap:+86 18808666258

Web: www.chinacysalestruck.com

if you want to know me, please use your phone to scan above QR code