Cheaper Price Small outdoor Billboard Truck for sale

辰远专汽
CHENYUAN-AUTO

www.chinacysalestruck.com

(0086) 18808666258

steven@chinacysalestruck.com

Main Specification

Main specifications			
Product model name	ZQZ5021XXCA Mini led truck		
Total weight(Kg)	1810	Drive form	4x2
Payload (Kg)	4950	Overall dimension (mm)	4200×1695×2405
Curb weight(Kg)	1185	cab seats (man)	2
Approach / departure angle(°)	58/21	Front/rear hang(mm)	480/1220
Number of axles	2	Wheelbase(mm)	2500
Axle load	925/885	Max speed(Km/h)	95
Chassis specifications			
Chassis model	SC1022DB4N	Manufacturer	Hebei Changan Automobile Co., Ltd.
Brand name	ChangAn brand	Overall dimension(mm)	3800×1480×1810
Tire specification	165/70R13LT	Tires No.	4
Leaf spring	-/5	Front track(mm)	1280
Type of fuel	Gas	Rear track(mm)	1290
Emission standard	Euro III	Transmission	5 forward gear
Driving cab			
Chassis model	Engine Manufacturer	Displacement(ml)	Power(KW)
JL466Q4	Chongqing Changan automobile Limited by Share Ltd	1012	39
Led truck			
Main Screen Model	P8 bright LED Screen	Left side of the Screen size in body	
Right side of the roller ad size	8KW Omar ultra-quiet generator	Rear monochrome screen size	
Screen Power Source	4 Waterproof frets	Control System	Industrial Computer
Audio Equipment	Omar ultra-quiet generator 8KW	Screen Lift System	Hydraulic Lift
Screen Lift Height		Spare external power connector	380V
Led truck			
1. This truck is a special vehicle for advertising, generally used for the product promotion, brand promotion, draft activities			
Live shows sales, sporting events, vocal concerts, concerts!			
2Can be showing at any time, communication, interaction, publicity coverage extensively. And meanwhile effectively get			
the best of advertising effect,,			
3. According to own requirement. you can select the left and right sides and the back medium(include LED full color,			
Monochrome LED, Light box advertising) , screen type.,			
4. Can select to configure the stage hydraulic extension, which is a multi-purpose vehicle.			

MOBILE LED TRUCK

Scanning mode:1/8 Scanning
Point spacing（mm）:6
Module pixel (point):32*32
Module Size（mm）:192*192
Pixel density (point /m2):27777
Structural characteristics:Lamp drive in one
brightness(CD/M2):≥5800
Module weight(Kg):0.335
Maximum current(A):6.94
Whole screen power(W/m2): 942
Optimal sight distance（m):≥6

Type of lamp tube:SMD3535
Attenuation rate:≤15%
Average time free time: ≥10 thousand hours
Blind rate: ＜0.0001，The factory is 0
Viewing angle(℃):
Level：140℃
Vertical：130℃
DriveIC: Constant current drive chip
Refresh rate(HZ): ≥ 960
Protection grade: IP65(Front)
Gray level（Bit）:13

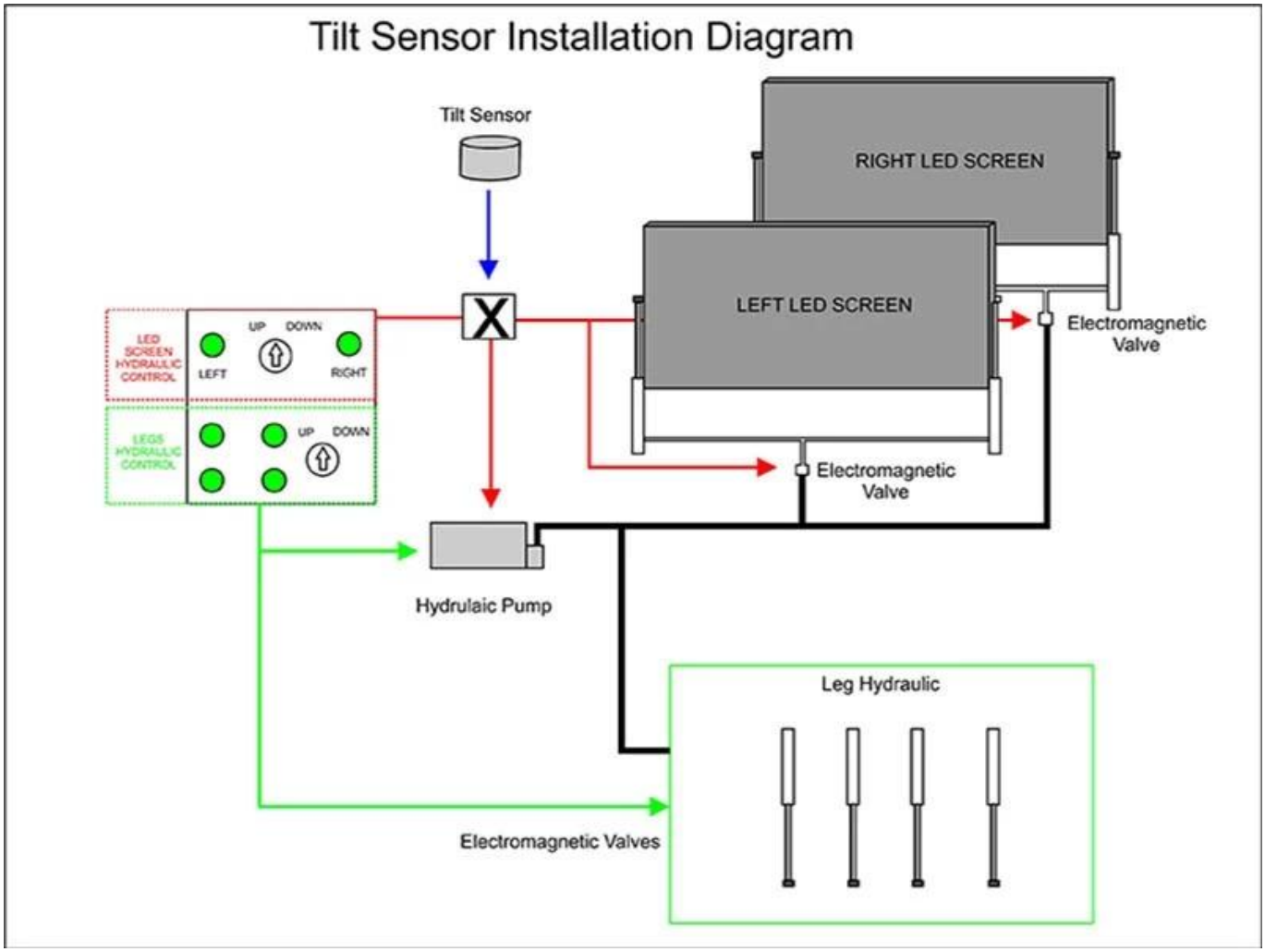

FACTORY OVERVIEW

WORKSHOP DISPLAY

OUR CERTIFICATION

Why Choose Us?

1. **Q: How long is the warranty period?**
   A: All of our trucks have one year warranty or 25000KM since you get the truck.
2. **Q: What’s the main market of yourcompany?**
   A: We have customers all over the worldand our main market it Afrian, all the individuals and units are my partnerswho have a demand of china’s high quality automobile industry product.
3. **Q: How much the production capacity and supply capacity of your factory for one year?**
   . A: This depends on your needs. 10 years of spare parts sales experience makes us have a smooth supply channels.
4. **Q: Where is your factory located?**
   A:Our company is located in Suizhou City,Hubei Province,the Capital of Special Purpose Vehicle in China.Warmly welcome to our factory.
5. **Q: The reason why you chose our company?**
   A: We have the abundant resources supply, professional quality inspection engineers,excellent service team, we will integrate all resources for your needs, let you experience the more cost-effective and more convenient "one-stop" procurement services, effectively reduce the purchasing cost.

PACKAGING & SHIPPING

NYK LINE

OUR MARKET

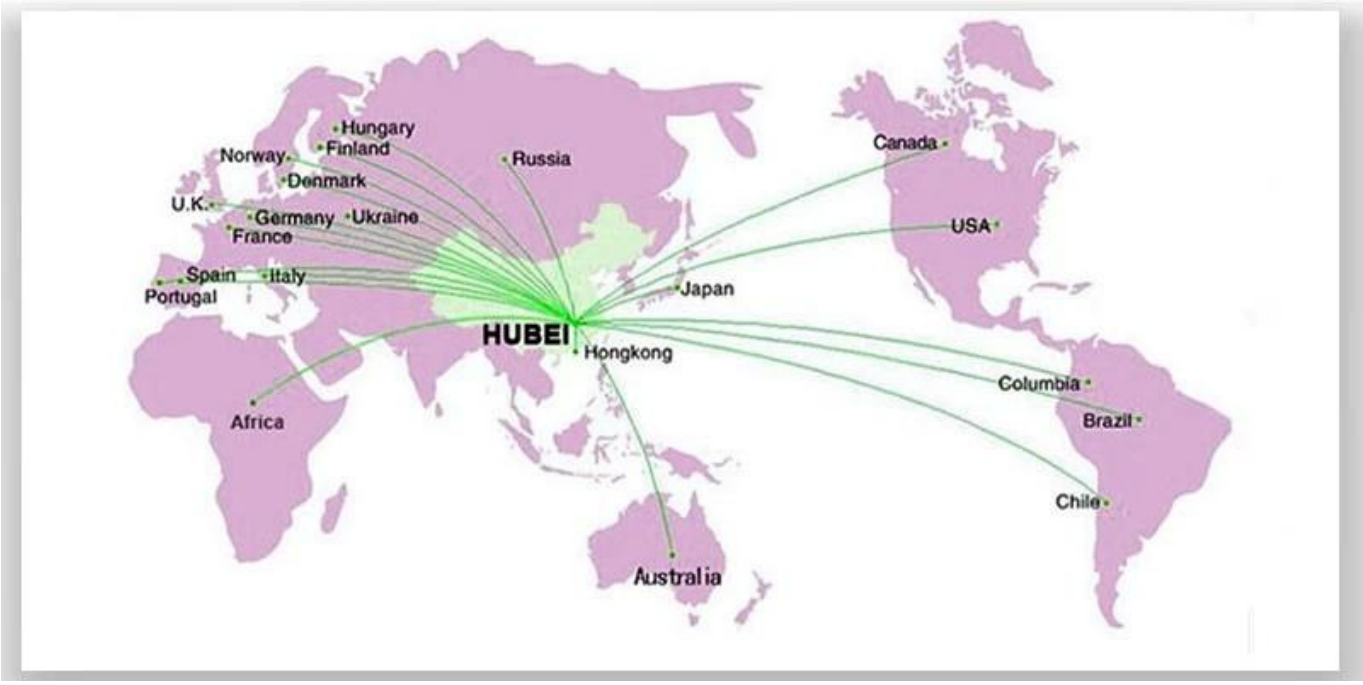
Hungary
Finland
Norway
Denmark
U.K.
Germany
Ukraine
France
Spain
Italy
Portugal
Russia
Canada
USA
Japan
HUBEI
Hongkong
Africa
Columbia
Brazil
Chile
Australia

CLIENTS INVISTING

CONTACT US

Steven.wang

Tel:+86 722 3229822

Mobile:++86 18808666258

Email: steven@chinacyalestruck.com

Skype:Truck_chengli

Whatsap:+86 18808666258

Web: www.chinacysalestruck.com

if you want to know me, please use your phone to scan above QR code