Sinotruck□□□□Ourdoor□□□□□□

Main Specification

□□□□			
□□□□□□□□	ZQZ5021XXCA□□led□□		
□□□□Kg□	1810	□□□□	4x2
□□□□□□□□	4950	□□□□□mm□	4200×1695×2405
□□□□□Kg□	1185	□□□□□□□□	2
□□/□□□□°□	58/21	□□/□□□mm□	480/1220
□□	2	□□□mm□	2500
□□	925/885	□□□□□Km / h□	95
□□□□			
□□□□	SC1022DB4N	□□□	□□□□□□□□□□
□□	□□□□	□□□□□mm□	3800×1480×1810
□□□□	165 / 70R13LT	□□□	4
□□	-/ 5	□□□□mm□	1280
□□□□	□□□	□□□□mm□	1290
□□□□	□□	□□	5□□□□
□□□			
□□□□	□□□□□□	□□□ml□	□□□KW□
JL466Q4	□□□□□□□□□□□□□	1012	39
LED□□			
□□□□	P8□□LED□	□□□□□□□□	
□□□□□□□□	8KW□□□□□□□□□	□□□□□□□□	
□□□□	4□□□□□	□□□□	□□□□□
□□□□	□□□□□□□□8KW	□□□□□□	□□□□□
□□□□□□		□□□□□□□□□	380V
LED□□			
1.□□□□□□□□□□□□

MOBILE LED TRUCK

Scanning mode:1/8 Scanning
Point spacing（mm）:6
Module pixel (point):32*32
Module Size（mm）:192*192
Pixel density (point /m2):27777
Structural characteristics:Lamp drive in one
brightness(CD/M2):≥5800
Module weight(Kg):0.335
Maximum current(A):6.94
Whole screen power(W/m2): 942
Optimal sight distance（m):≥6

Type of lamp tube:SMD3535
Attenuation rate:≤15%
Average time free time: ≥10 thousand hours
Blind rate: ＜0.0001，The factory is 0
Viewing angle(℃):
Level：140℃
Vertical：130℃
DriveIC: Constant current drive chip
Refresh rate(HZ): ≥ 960
Protection grade: IP65(Front)
Gray level（Bit）:13

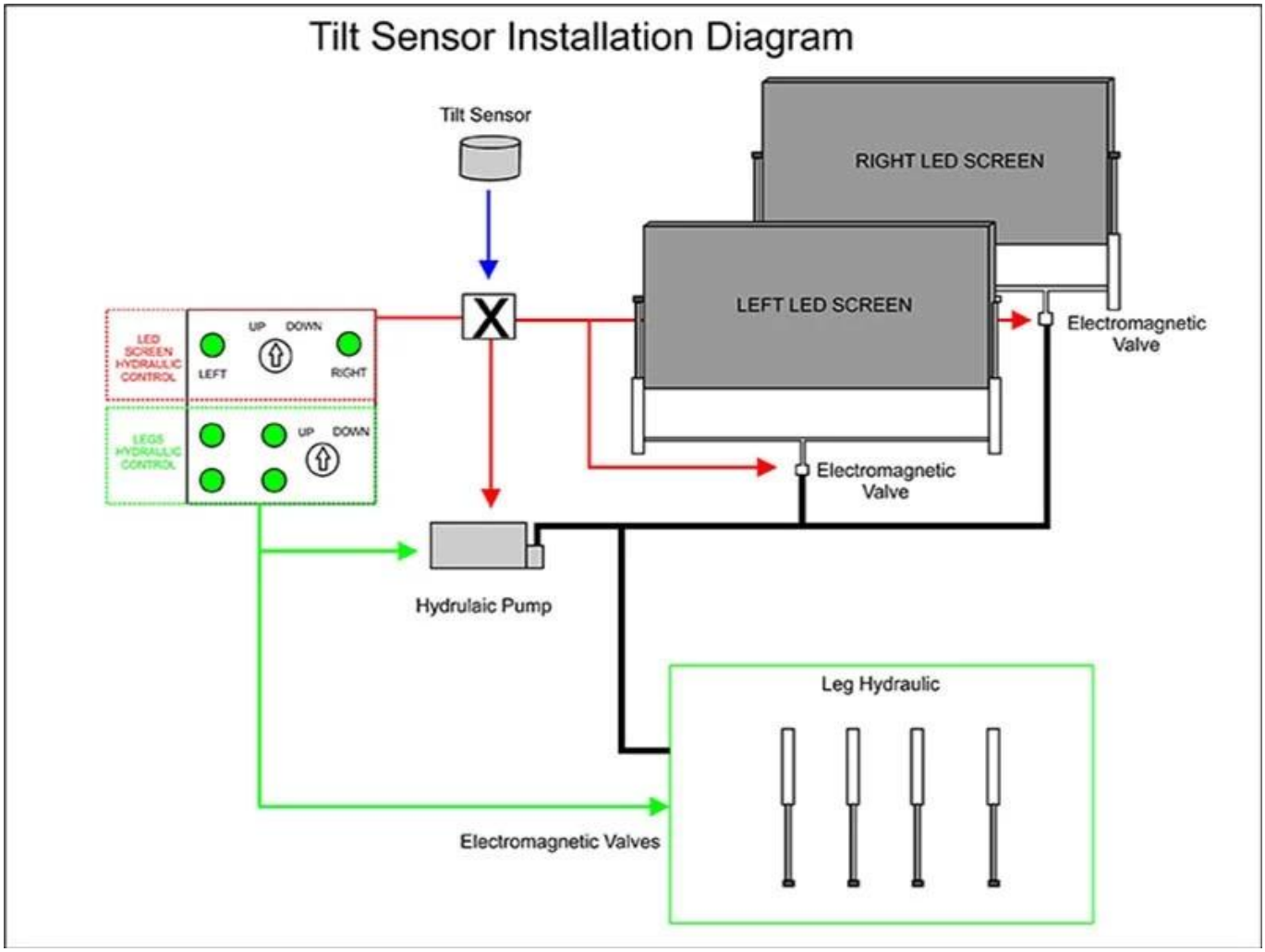

FACTORY OVERVIEW

WORKSHOP DISPLAY

OUR CERTIFICATION

Why Choose Us?

1.□□□□□□□□□□

□□□□□□□□□□

NYK LINE

OUR MARKET

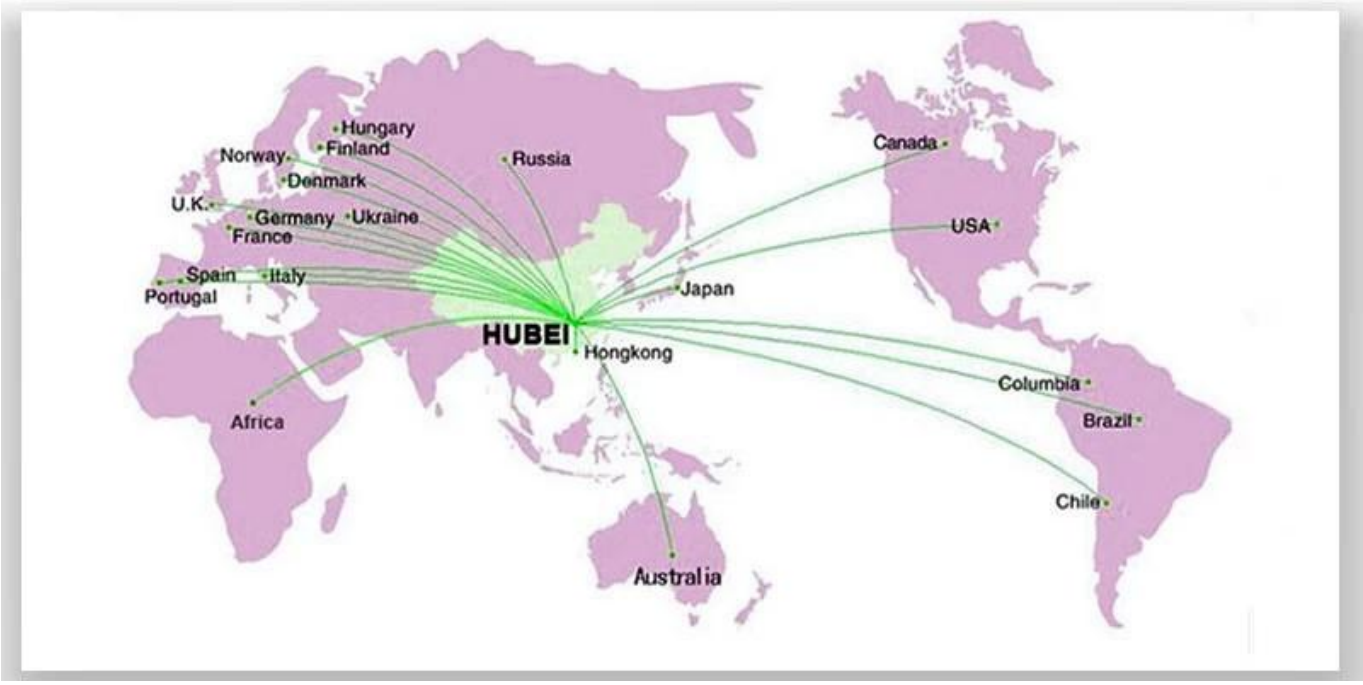
Hungary
Finland
Norway
Denmark
U.K.
Germany
Ukraine
France
Spain
Italy
Portugal
Russia
Canada
USA
Japan
HUBEI
Hongkong
Africa
Columbia
Brazil
Chile
Australia

CLIENTS INVISTING

CONTACT US

Steven.wang

Tel:+86 722 3229822

Mobile:++86 18808666258

Email: steven@chinacyalestruck.com

Skype:Truck_chengli

Whatsap:+86 18808666258

Web: www.chinacysalestruck.com

if you want to know me, please use your phone to scan above QR code