□□6x2□□□10□□□□□□□□□□□□□

辰远专汽
CHENYUAN-AUTO
www.chinacysalestruck.com
CE
CCC
IAF
(0086) 18808666258
steven@chinacysalestruck.com

求
13872886800
湖北程力

以 人 为 本
湖北程力

起重机操作注意事项
支腿架操作注意事项

[illegible] [illegible]

1.[illegible]

2.[illegible]

3.[illegible]H[illegible] [illegible]

[illegible]

5.[illegible]

## Main Specification

| | | | |
|---|---|---|---|
| □□□□□□ | | | |
| □□□□□□□ | CLW5253JSQ3□□□□□ | | |
| □□□□□kg□ | 24900 | □□□□ | 6 X 2 |
| □□□□□kg□□ | 14000 | □□□□□□□□ | 3 |
| □□□□□Kg□ | 10705 | □□□□□mm□ | 11200×2500×3750 |
| □□/□□□□□°□ | 12□□34 | □□□□□mm□ | 7600×2294×550 |
| □□ | 3 | □/□□□□mm□ | □□□□□□□□□□□□□□□□ |
| □□□Kg□ | 6750/6780/11370 | □□□mm□ | 1950□+ 4750 |
| □□□□□Km / h□ | 85 | | |
| □□□□□□ | | | |
| □□□□ | EQ5253GFJ3 | □□ | □□ |
| □□□□ | □□□□ □□ | □□□□ | 8 |
| □□/□□□□□°□ | □□□□□□□□ | □□□□ | 10.00-20 |
| □□□□ | 10/10/12 + 9 | □□□mm□ | □□□□□□□□□□□□□□□□ |
| □□□□ | □□□ | □□□□mm□ | 1860 |
| □□□□ | □III | □□ | 8gears |
| □ | □□□□ □□□□□□□□□□□□□ □□□□□□□□□□□□ | | |
| □□□□□ | □□□□□ | □□□ml□ | □□□Kw□ |
| B210 33 | □□□□□ □□□□□□□ | 5900 | 155 |
| □□□□□□□ | | | |
| □□□□□ | SQS250 | □□□□□ | □□ |
| □□□□□ | □□□□□□ | □□□□□□kgs□ | 2820 |
| □□□□□□kg□ | 10000 | □□□□□□□m□ | 14 |
| □□□□□m□ | 12 | □□□□ | □□□□□/ □□□ |
| □□□□ | 4 | □□□□□□□□ | 2□4 |
| □□□□ | | | |
| □□□□□□□□□□□ □□□□□□□□□□□□□□□□□□□□□□□ □□□□□□□□□□□□□□□□H□□□ □□□□□□□□□□□□□□□□□□□□□□□□□ □□□□□□□□□□□□ □□□□□□□□□□ 360°□□□□□ | | | |

吊臂界面采用加强钢板，且8吨以上吊机采用U型臂，可以提高截面抗弯能力！

THE BOOM INTERFACE WITH REINFORCED STEEL PLATE, AND ABOVE 8 TONS CRANE USE U-TYPE BOOM WITH POWERFUL BENDING RESISTANCE.

液压绞车依靠碟簧和摩擦片制动，效率高且噪音低，发热量小，耐用！！

HYDRAULIC WINCH RELIES ON DISC SPRING AND FRICTION PLATE TO BRAKE,HIGH EFFICIENCY, LOW NOISE AND LOW HEAT GRNERATION;

下降过程中依靠液压平衡阀平衡重物，产品的可靠性极高！

RELYING ON HYDRAULIC BALANCE VALVE TO BALANCE HEAVY OBJECTS DURING THE DESCENDING PROCESS GREATLY IMPROVING PRODUCT RELIABILITY.



6.3 吨 以上吊机均采用方厢支腿，能更有效的保护油缸。

ABOUT 6.3T CRANE USE SQUARE LEGS CAN PROTECT THE CYLINDER MORE EFFECTIVELY.

水性油漆，更加环保。

WATER-BASED PAINT,MORE ENVIRONMENTALLY FRIENDLY.

## Crane Specification

| Crane model | Max Lifting quality | Max Lifting Moment | Recommended Power | H-System Max Flow Rate | H-System Rated Pressure | Oil Tank Volume | Rotation Angle | Crane Dead Weight | Install Space |
|---|---|---|---|---|---|---|---|---|---|
| SQ6.3SK2Q | 6300KG | 15.7 T.M | 20 KW | 40 L/MIN | 20MPA | 90 L | Full Gyration | 2117 KG | 900 MM |

# SQ6.3SK2Q

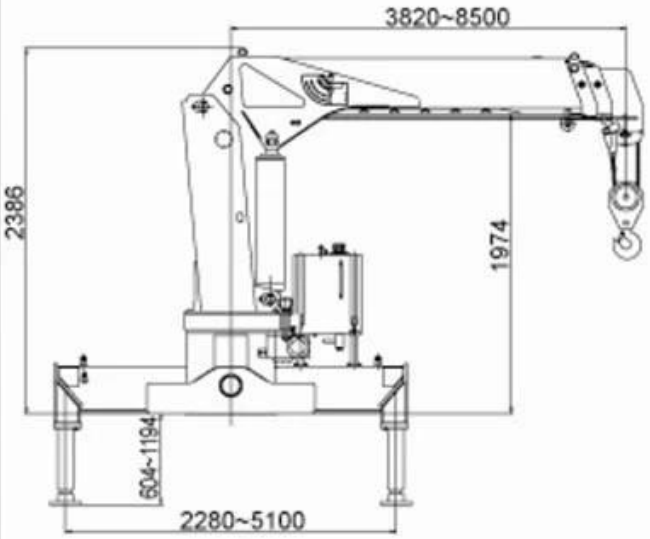


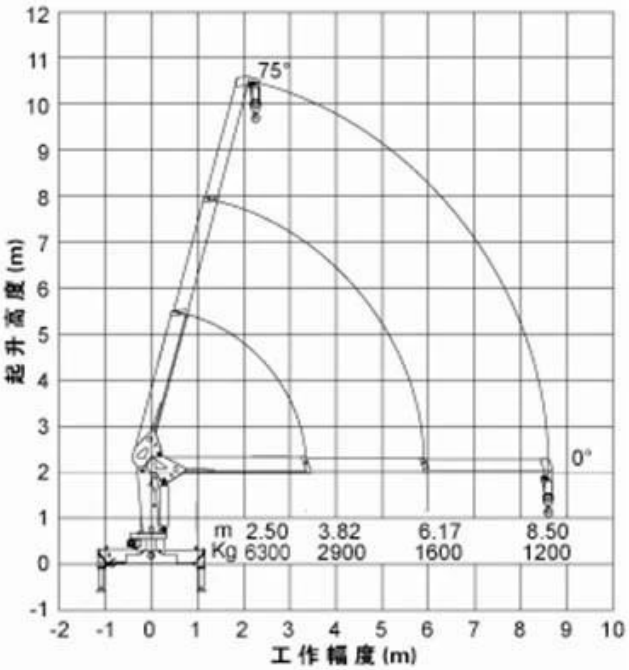

## SQ5SK2Q

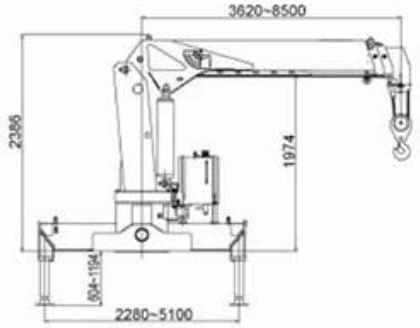


STRAIGHT ARM WITH CRANE SAMPLE

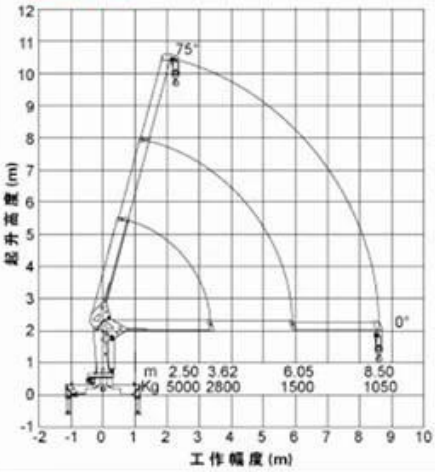


## SQ8SK3Q

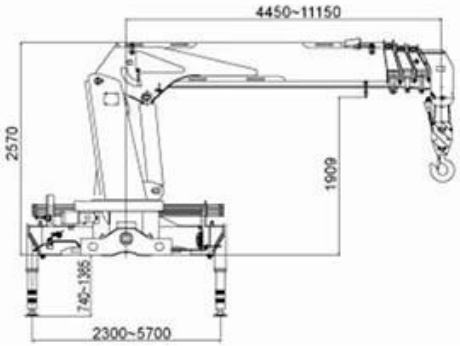


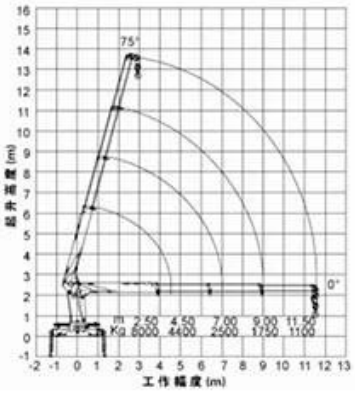


## SQ16SK4Q

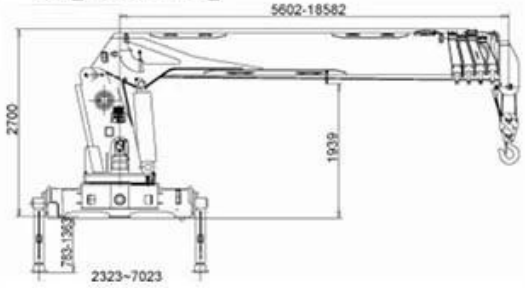

As per a defferent requires from our customers, we will recommend a suitable type as refering in the selected truck, about the crane weight, we have many chooses, such as Straight arm: **SQ2SK1Q/ SQ2SK2Q/SQ3.2SK1Q/SQ3.2SK2Q/SQ4SK3Q/SQ5SK2Q/SQ5SK3Q/SQ6.3SK3Q /SQ8SK3Q/SQ10SK3Q/SQ12SK3Q/SQ14SK4Q/SQ16SK5Q/SQ25SK2Q** and so on.

**SQ5ZK2Q**

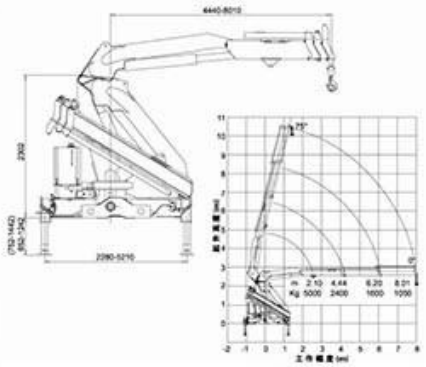

**SQ8ZK3Q**

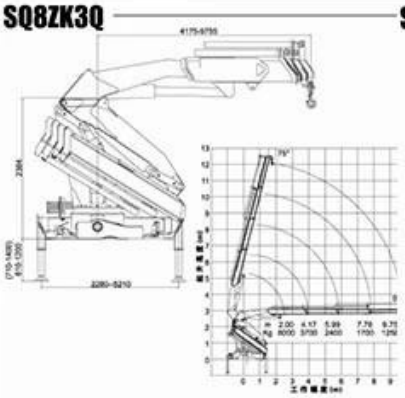

**SQ6.3ZK2Q**

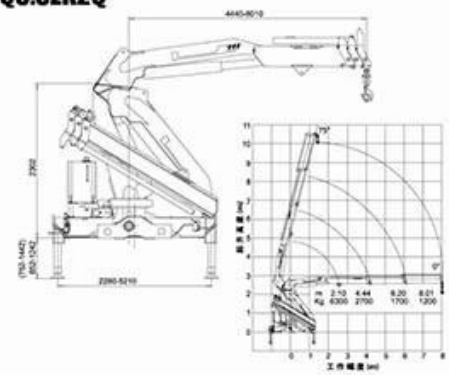

FOLDING ARM WITH CRANE SAMPLE

**SQ10ZK3Q**

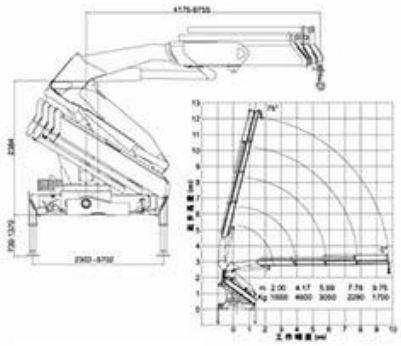

**SQ12ZK3Q**

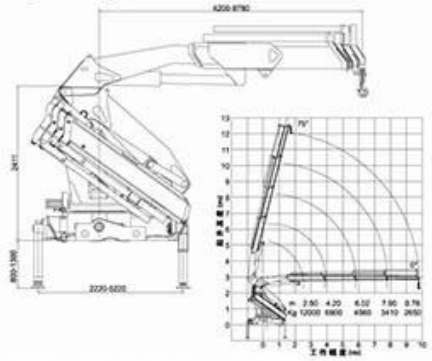

**SQ25ZK6Q**

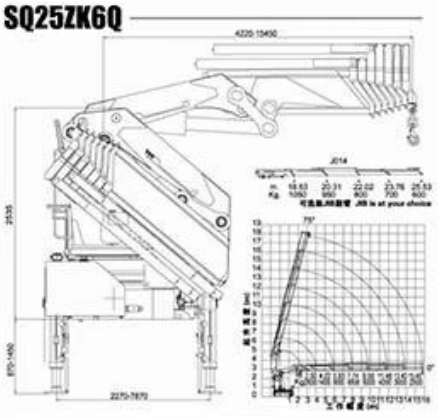

As per a defferent requires from our customers, we will recommend a suitable type as refering in the selected truck, about the crane weight, we have many chooses, such as Folding arm: **SQ5ZK2Q/ SQ5ZK3Q/ SQ6.3ZK2Q/ SQ6.3ZK3Q/ SQ8ZK3Q/ SQ10ZK3Q/ SQ12ZK3Q/ SQ14ZK3Q/ SQ16ZK4Q/ SQ25ZK6Q and so on.**

## OPTIONAL ACCESSORIES

REMOTE CONTROL

BASKET

TOP SEAT

AUGER DRILL

REAR OUTRIGGER

MOMENT LIMITED VALVE

GRAPPLE

GRAPPLE

GRAPPLE

## FACTORY OVERVIEW

## WORKSHOP DISPLAY

## OUR CERTIFICATION

## Why Choose Us?

**1.**□□□□□□□□

□□□□□□□□□□□□□□□□□□□□□□□25000□□□

**2.**□□□□□□□□□□□□

□□□□□□□□□□□□□□□□□□Afrian□□□□□□□□□□□□□□□□□□□□□□□□□□□□□□□□

**3.**□□□□□□□□□□□□□□ □□□□

□□□□□□□□□□□ 10□□□□□□□□□□□□□□□□□□□□

**4.**□□□□□□□□□

□□□□□□□□□□□□□□□□□□□□□□□□□□□□□□

**5.**□□□□□□□□□□□□□□

□□□□□□□□□□□□□□□□□□□□□□□□□□□□□□□□□□□□□□□□□□□□□□□□□□□□□□□□“□□□”□□□□□□□□□
□□□□

## PACKAGING & SHIPPING

NYK LINE

## OUR MARKET

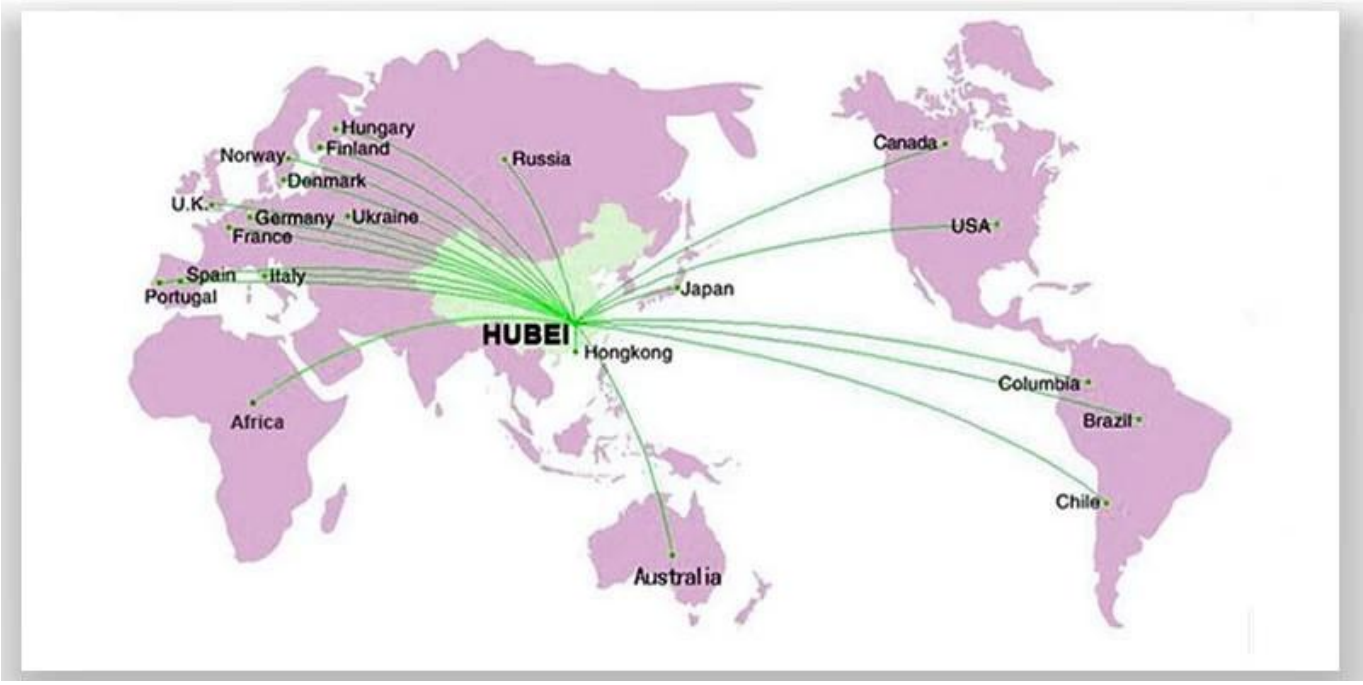
Hungary
Finland
Norway
Denmark
U.K.
Germany
Ukraine
France
Spain
Italy
Portugal
Russia
Canada
USA
Japan
HUBEI
Hongkong
Africa
Columbia
Brazil
Chile
Australia

## CLIENTS INVISTING

## CONTACT US

Steven.wang

Tel:+86 722 3229822

Mobile:++86 18808666258

Email: steven@chinacyalestruck.com

Skype:Truck_chengli

Whatsap:+86 18808666258

Web: www.chinacysalestruck.com

if you want to know me, please use your phone to scan above QR code