SQS157-4□□5□□□□□□□□□□□

辰远专汽
CHENYUAN-AUTO
www.chinacysalestruck.com
SQS157-4
CE
CCC
MEMBER OF MULTILATERAL
IAF
RECOGNITION ARRANGEMENT
(0086) 18808666258
steven@chinacysalestruck.com

SQ2
SQ3.2
XCMG

[illegible] [illegible]
1.[illegible]
2.[illegible]
3.[illegible]H[illegible] [illegible]
[illegible]
5.[illegible]

Main Specification

[illegible]			
[illegible]	JDF5120JSQT3[illegible]		
[illegible]kg[illegible]	12495	[illegible]	4 x 2
[illegible]kg[illegible]	4800	[illegible]	3
[illegible]Kg[illegible]	7500	[illegible]mm[illegible]	8700×2495×3460
[illegible]/[illegible]°[illegible]	20/12	[illegible]mm[illegible]	5400×2290×550
[illegible]	2	[illegible]/[illegible]mm[illegible]	[illegible]
[illegible]Kg[illegible]	[illegible]	[illegible]mm[illegible]	4700
[illegible]Km / h[illegible]	90[illegible]/[illegible]		
[illegible]			
[illegible]	DFL1120B	[illegible]	[illegible]
[illegible]	[illegible]	[illegible]	6
[illegible]/[illegible]°[illegible]	20/13	[illegible]	9.00-20
[illegible]	7/9 + 6,8 / 10 + 8	[illegible]mm[illegible]	1880,1920,1940
[illegible]	[illegible]	[illegible]mm[illegible]	1800,1860
[illegible]	[illegible]III	[illegible]	
[illegible]	[illegible]		
[illegible]	[illegible]	[illegible]ml[illegible]	[illegible]Kw[illegible]
B170 33	[illegible]	5900	125
[illegible]			
[illegible]	SQ5SA2	[illegible]	CLW
[illegible]	[illegible]	[illegible]kg[illegible]	1600
[illegible]kg[illegible]	5000	[illegible]m[illegible]	10
[illegible]m[illegible]	8	[illegible]	[illegible]/[illegible]
[illegible]	3	[illegible]	2/4
[illegible]			
[illegible]H[illegible]360°[illegible]			

Brief Introduction

吊臂界面采用加强钢板，且8吨以上吊机采用U型臂，可以提高截面抗弯能力！

THE BOOM INTERFACE WITH REINFORCED STEEL PLATE, AND ABOVE 8 TONS CRANE USE U-TYPE BOOM WITH POWERFUL BENDING RESISTANCE.

液压绞车依靠碟簧和摩擦片制动，效率高且噪音低，发热量小，耐用！！

HYDRAULIC WINCH RELIES ON DISC SPRING AND FRICTION PLATE TO BRAKE,HIGH EFFICIENCY, LOW NOISE AND LOW HEAT GRNERATION;

下降过程中依靠液压平衡阀平衡重物，产品的可靠性极高！

RELYING ON HYDRAULIC BALANCE VALVE TO BALANCE HEAVY OBJECTS DURING THE DESCENDING PROCESS GREATLY IMPROVING PRODUCT RELIABILITY.

6.3 吨 以上吊机均采用方厢支腿，能更有效的保护油缸。

ABOUT 6.3T CRANE USE SQUARE LEGS CAN PROTECT THE CYLINDER MORE EFFECTIVELY.

水性油漆，更加环保。

WATER-BASED PAINT,MORE ENVIRONMENTALLY FRIENDLY.

Crane Specification

Crane model	Max Lifting quality	Max Lifting Moment	Recommended Power	H-System Max Flow Rate	H-System Rated Pressure	Oil Tank Volume	Rotation Angle	Crane Dead Weight	Install Space
SQ6.3SK2Q	6300KG	15.7 T.M	20 KW	40 L/MIN	20MPA	90 L	Full Gyration	2117 KG	900 MM

SQ6.3SK2Q

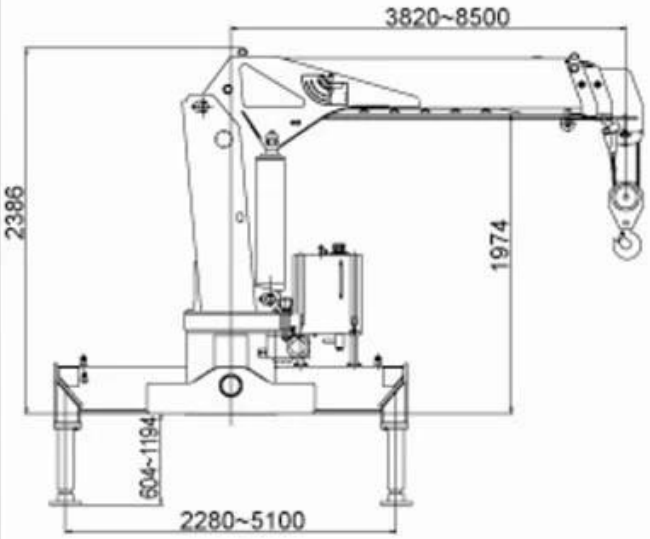

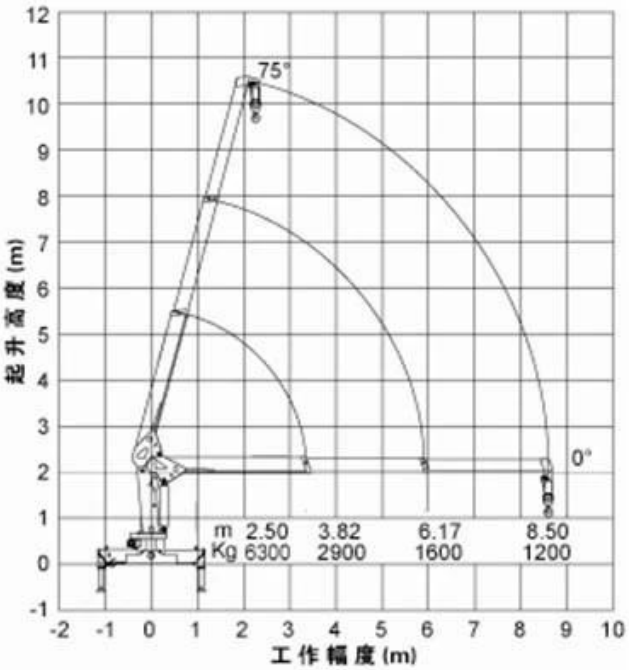

SQ5SK2Q

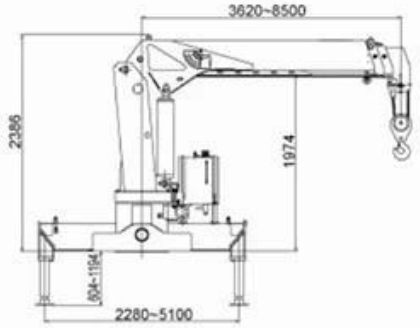

STRAIGHT ARM WITH CRANE SAMPLE

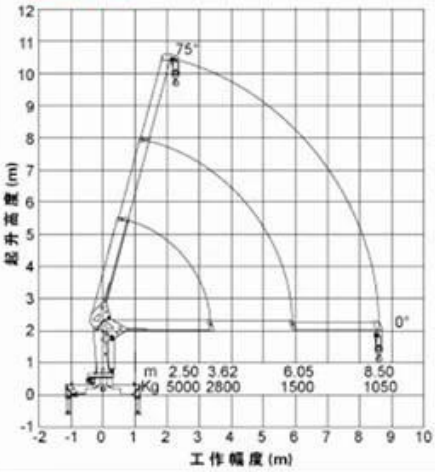

SQ8SK3Q

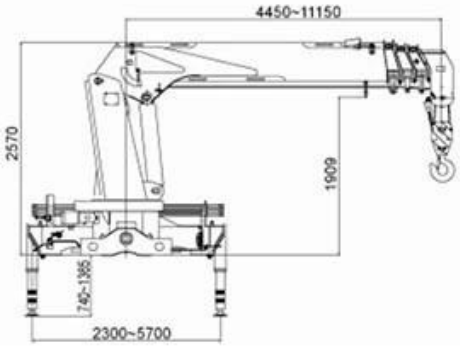

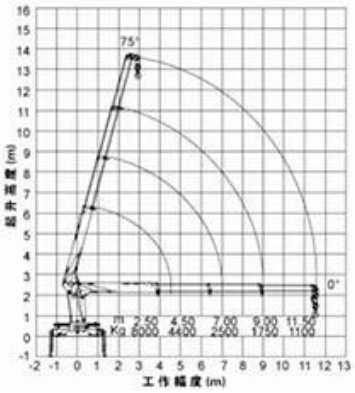

SQ16SK4Q

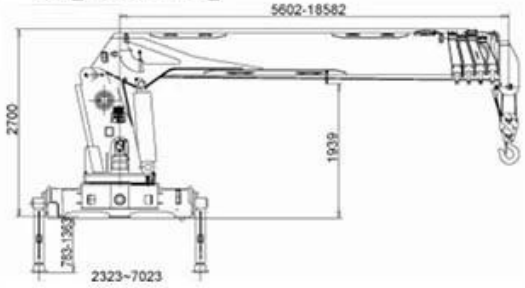

As per a defferent requires from our customers, we will recommend a suitable type as refering in the selected truck, about the crane weight, we have many chooses, such as Straight arm: **SQ2SK1Q/ SQ2SK2Q/SQ3.2SK1Q/SQ3.2SK2Q/SQ4SK3Q/SQ5SK2Q/SQ5SK3Q/SQ6.3SK3Q /SQ8SK3Q/SQ10SK3Q/SQ12SK3Q/SQ14SK4Q/SQ16SK5Q/SQ25SK2Q** and so on.

SQ5ZK2Q

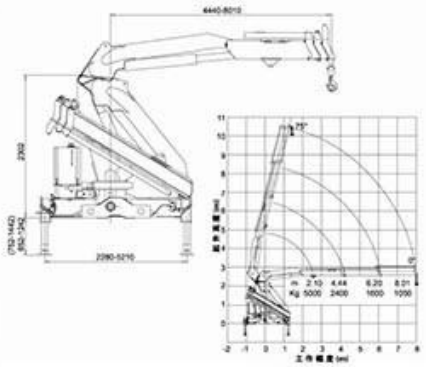

SQ8ZK3Q

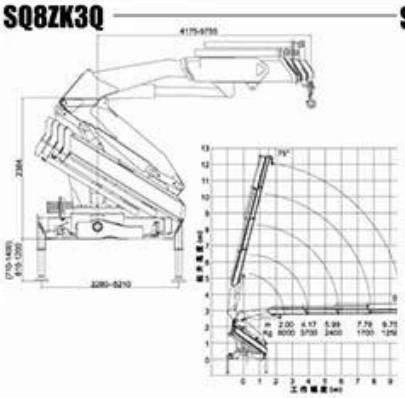

SQ6.3ZK2Q

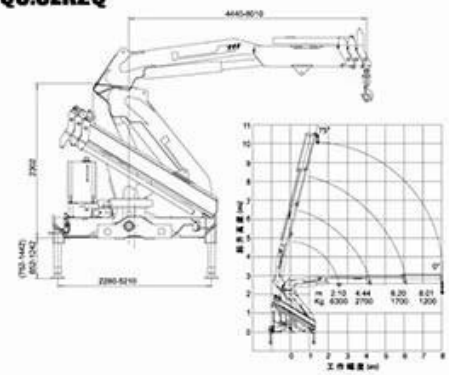

FOLDING ARM WITH CRANE SAMPLE

SQ10ZK3Q

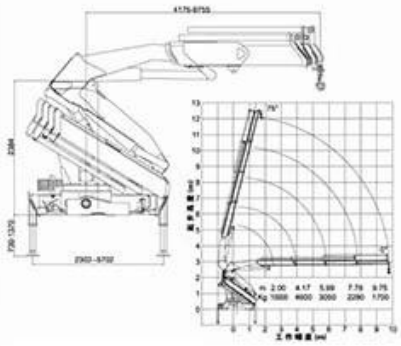

SQ12ZK3Q

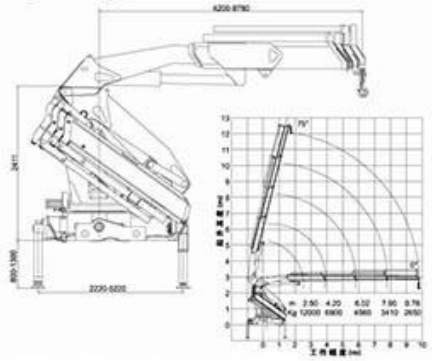

SQ25ZK6Q

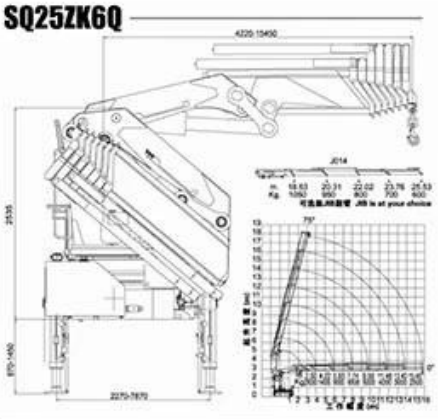

As per a defferent requires from our customers, we will recommend a suitable type as refering in the selected truck, about the crane weight, we have many chooses, such as Folding arm: **SQ5ZK2Q/ SQ5ZK3Q/ SQ6.3ZK2Q/ SQ6.3ZK3Q/ SQ8ZK3Q/ SQ10ZK3Q/ SQ12ZK3Q/ SQ14ZK3Q/ SQ16ZK4Q/ SQ25ZK6Q and so on.**

OPTIONAL ACCESSORIES

REMOTE CONTROL

BASKET

TOP SEAT

AUGER DRILL

REAR OUTRIGGER

MOMENT LIMITED VALVE

GRAPPLE

GRAPPLE

GRAPPLE

FACTORY OVERVIEW

WORKSHOP DISPLAY

OUR CERTIFICATION

Why Choose Us?

1.[illegible]

[illegible]25000[illegible]

2.[illegible]

[illegible]Afrian[illegible]

3.[illegible] [illegible]

[illegible] 10[illegible]

4.[illegible]

[illegible]

5.[illegible]

[illegible]“[illegible]”[illegible]

PACKAGING & SHIPPING

NYK LINE

OUR MARKET

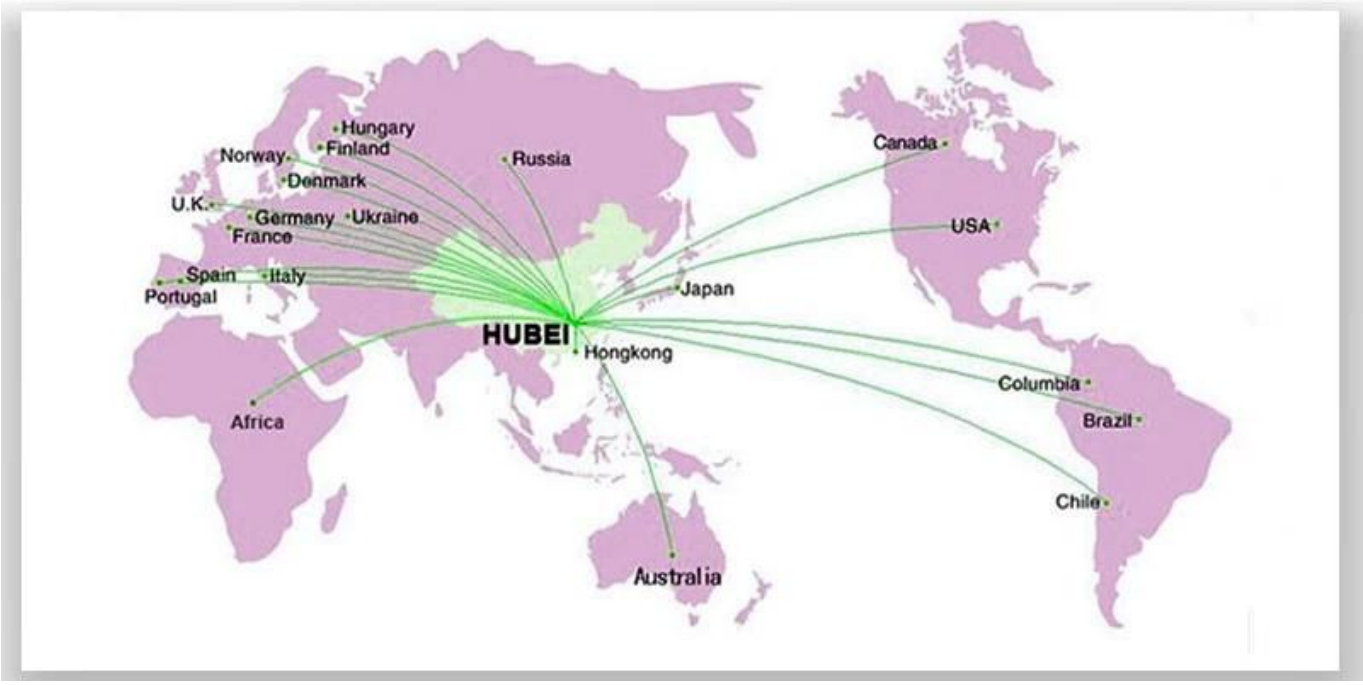
Hungary
Finland
Norway
Denmark
U.K.
Germany
Ukraine
France
Spain
Italy
Portugal
Russia
Canada
USA
Japan
HUBEI
Hongkong
Africa
Columbia
Brazil
Chile
Australia

CLIENTS INVISTING

CONTACT US

Steven.wang

Tel:+86 722 3229822

Mobile:++86 18808666258

Email: steven@chinacyalestruck.com

Skype:Truck_chengli

Whatsap:+86 18808666258

Web: www.chinacysalestruck.com

if you want to know me, please use your phone to scan above QR code